DIECI

SAMSON

50.8 | 65.8 | 60.9 | 75.10 | 75.10 S

dieci.com

PERFORMANCE

Vehicle model	SAMSON 50.8 VS EVO2 - GD	SAMSON 65.8 VS EVO2 - GD	SAMSON 60.9 VS EVO2 - GD	SAMSON 75.10 - GD	SAMSON 75.10 S - GD
Maximum capacity	4999 kg (11021 lb)	6500 kg (14330 lb)	6000 kg (13228 lb)	7200 kg (15873 lb)	7500 kg (16535 lb)
Maximum lifting height	7.7 m (25.3 ft)	7.7 m (25.3 ft)	8.6 m (28.2 ft)	9.5 m (31.2 ft)	9.65 m (31.7 ft)
Maximum horizontal extension	4.2 m (13.8 ft)	4.2 m (13.8 ft)	4.9 m (16.1 ft)	5.4 m (17.7 ft)	5.4 m (17.7 ft)
Fork swiveling angle	144°	144°	144°	134°	134°
Pull-out force	8900 daN (20008 lbf)	8900 daN (20008 lbf)	8900 daN (20008 lbf)	10600 daN (23830 lbf)	10600 daN (23830 lbf)
Towing force	8585 daN (19300 lbf)	8585 daN (19300 lbf)	8585 daN (19300 lbf)	8360 daN (18794 lbf)	8360 daN (18794 lbf)
Unladen weight	10560 kg (23281 lb)	11300 kg (24912 lb)	11500 kg (25353 lb)	12600 kg (27778 lb)	13500 kg (29762 lb)
Maximum climb angle	40 %	40 %	40 %	40 %	40 %
Max speed (referred to wheels with maximum permitted diameter)	40 km/h (24.9 mph)	40 km/h (24.9 mph)	40 km/h (24.9 mph)	40 km/h (24.9 mph)	40 km/h (24.9 mph)

BOOM

Vehicle model	SAMSON 50.8 VS EVO2 - GD	SAMSON 65.8 VS EVO2 - GD	SAMSON 60.9 VS EVO2 - GD	SAMSON 75.10 - GD	SAMSON 75.10 S - GD
Getting off the basket	6.9 s	10.4 s	10.9 s	9,9 s	9,9 s
Lifting	8.7 s	11.1 s	11.6 s	15,1 s	15,1 s
Extension	7.3 s	7.3 s	8.4 s	11,4 s	11,4 s
Retraction	4.8 s	4.8 s	5.5 s	5,1 s	5,1 s
Forward swiveling	3.7 s	3.7 s	3.7 s	7,5 s	7,5 s
Reverse swiveling	3.8 s	3.8 s	3.8 s	3.3 s	3.3 s

ENGINE

Vehicle model	SAMSON 50.8 VS EVO2 - GD	SAMSON 65.8 VS EVO2 - GD	SAMSON 60.9 VS EVO2 - GD	SAMSON 75.10 - GD	SAMSON 75.10 S - GD
Brand	FPT	FPT	FPT	FPT	FPT
Nominal power	125 kW (168 HP)	125 kW (168 HP)	125 kW (168 HP)	103 kW (138 HP)	103 kW (138 HP)
@rpm	2200 rpm	2200 rpm	2200 rpm	2200 rpm	2200 rpm
Peak power	128 kW (172 HP)	128 kW (172 HP)	128 kW (172 HP)	114 kW (153 HP)	114 kW (153 HP)
@rpm	1900 rpm	1900 rpm	1900 rpm	1800 rpm	1800 rpm
Operation	4-stroke	4-stroke	4-stroke	4-stroke	4-stroke
Injection	Electronic, Common Rail	Electronic, Common Rail	Electronic, Common Rail	4-Stroke Electronic Injection, Common Rail	4-Stroke Electronic Injection, Common Rail
Number and arrangement of cylinders	4, Vertical in line	4, Vertical in line	4, Vertical in line	4, Vertical in line	4, Vertical in line
Displacement	4485 cm^3 (274 in^3)	4485 cm^3 (274 in^3)	4485 cm^3 (274 in^3)	4485 cm^3 (274 in^3)	4485 cm^3 (274 in^3)
Consumption	212 g/kWh (348.74 lb/Hp h)	212 g/kWh (348.74 lb/Hp h)	212 g/kWh (348.74 lb/Hp h)	212 g/kWh (348.74 lb/Hp h)	212 g/kWh (348.74 lb/Hp h)
@rpm	2200 rpm	2200 rpm	2200 rpm	2200 rpm	2200 rpm
Emission standards	Stage V	Stage V	Stage V	Stage V	Stage V
Exhaust gas treatment	DOC+SCRoF (with AdBlue)	DOC+SCRoF (with AdBlue)	DOC+SCRoF (with AdBlue)	DOC+SCRoF (with AdBlue)	DOC+SCRoF (with AdBlue)
Cooling system	Liquid	Liquid	Liquid	Liquid	Liquid
Intake	16-valve turbocharger with aftercooler	16-valve turbocharger with aftercooler	16-valve turbocharger with aftercooler	16-valve turbocharger with aftercooler	16-valve turbocharger with aftercooler
Air filter	Air pre-heating and air pre-filtering with dust separator	Air pre-heating and air pre-filtering with dust separator	Air pre-heating and air pre-filtering with dust separator	Air pre-heating and air pre-filtering with dust separator	Air pre-heating and air pre-filtering with dust separator

TRANSMISSION

Vehicle model	SAMSON 50.8 VS EVO2 - GD	SAMSON 65.8 VS EVO2 - GD	SAMSON 60.9 VS EVO2 - GD	SAMSON 75.10 - GD	SAMSON 75.10 S - GD
Transmission type	Hydrostatic Vario System EVO2 electronically controlled with 2 hydrostatic motors with continuous automatic adjustment	Hydrostatic Vario System EVO2 electronically controlled with 2 hydrostatic motors with continuous automatic adjustment	Hydrostatic Vario System EVO2 electronically controlled with 2 hydrostatic motors with continuous automatic adjustment	Hydrostatic with variable displacement pump	Hydrostatic with variable displacement pump
Hydraulic motor	2 Hydraulic motors with continuous automatic adjustment	2 Hydraulic motors with continuous automatic adjustment	2 Hydraulic motors with continuous automatic adjustment	Hydrostatic with continuous automatic adjustment	Hydrostatic with continuous automatic adjustment
Reversal	With electronic control operated with vehicle in motion	With electronic control operated with vehicle in motion	With electronic control operated with vehicle in motion	Electro-Hydraulic	Electro-Hydraulic
Inching	With electronic pedal for controlled forward movement	With electronic pedal for controlled forward movement	With electronic pedal for controlled forward movement	With electronic pedal for controlled forward movement	With electronic pedal for controlled forward movement
Gearbox	-	-	-	Servo-controlled 2-speed	Servo-controlled 2-speed
Drive mode	Automotive, Eco, Loader, Creeper	Automotive, Eco, Loader, Creeper	Automotive, Eco, Loader, Creeper	-	-

DIFFERENTIAL AXLES

Vehicle model	SAMSON 50.8 VS EVO2 - GD	SAMSON 65.8 VS EVO2 - GD	SAMSON 60.9 VS EVO2 - GD	SAMSON 75.10 - GD	SAMSON 75.10 S - GD
Type of axles	2 steering, with 4 epicycloidal reduction gears. Limited slip 45% on both axles	2 steering, with 4 epicycloidal reduction gears. Limited slip 45% on both axles	2 steering, with 4 epicycloidal reduction gears. Limited slip 45% on both axles	2 steering, with 4 epicycloidal reduction gears	2 steering, with 4 epicycloidal reduction gears
Type of steering	4 wheels / transversal / 2 wheels	4 wheels / transversal / 2 wheels	4 wheels / transversal / 2 wheels	4 wheels / transversal / 2 wheels	4 wheels / transversal / 2 wheels
Front axle	Rigid (Levelling upon request)	Rigid (Levelling upon request)	Rigid (Levelling upon request)	With +/- 7° transverse leveling device	With +/- 7° transverse leveling device
Rear axle	Swinging	Swinging	Swinging	Swinging	Swinging
Service braking	Oil bath with servo brake on front and rear axle with double hydraulic system	Oil bath with servo brake on front and rear axle with double hydraulic system	Oil bath with servo brake on front and rear axle with double hydraulic system	Oil bath with servo brake on front and rear axle with double hydraulic system	Oil bath with servo brake on front and rear axle with double hydraulic system
Parking braking	Negative actuation with electronic control	Negative actuation with electronic control	Negative actuation with electronic control	Negative actuation with electrical control	Negative actuation with electrical control

HYDRAULIC SYSTEM

Vehicle model	SAMSON 50.8 VS EVO2 - GD	SAMSON 65.8 VS EVO2 - GD	SAMSON 60.9 VS EVO2 - GD	SAMSON 75.10 - GD	SAMSON 75.10 S - GD
Hydraulic pump type	Piston pump with variable flow rate for power steering and movements. Gear pumps for Fan Drive with fan reversal.	Piston pump with variable flow rate for power steering and movements. Gear pumps for Fan Drive with fan reversal.	Piston pump with variable flow rate for power steering and movements. Gear pumps for Fan Drive with fan reversal.	Gear pump for power steering and movements. Gear pump for Fan Drive.	Gear pump for power steering and movements. Gear pump for Fan Drive.
Hydraulic pump capacity	247 l/min (65.3 gal/min)	247 l/min (65.3 gal/min)	247 l/min (65.3 gal/min)	160 l/min (42.3 gal/min)	160 l/min (42.3 gal/min)
Max. operating pressure	26 MPa (3771 psi)	26 MPa (3771 psi)	26 MPa (3771 psi)	26 MPa (3771 psi)	26 MPa (3771 psi)
Distributor control	4 in 1 proportional electrical Joystick with FNR	4 in 1 proportional electrical Joystick with FNR	4 in 1 proportional electrical Joystick with FNR	Proportional 4 in 1 Joystick with FNR	Proportional 4 in 1 Joystick with FNR
Distributor type	Hydraulic in 4 sections with "Load Sensing" proportional electric control with "Flow Sharing", 4 simultaneous movements with independent maximum speed setting of each movement, continuous oil function on hydraulic sockets.	Hydraulic in 4 sections with "Load Sensing" proportional electric control with "Flow Sharing", 4 simultaneous movements with independent maximum speed setting of each movement, continuous oil function on hydraulic sockets.	Hydraulic in 4 sections with "Load Sensing" proportional electric control with "Flow Sharing", 4 simultaneous movements with independent maximum speed setting of each movement, continuous oil function on hydraulic sockets.	Hydraulic control distributor-single joystick with proportional and simultaneous controls (Flow Sharing)	Hydraulic control distributor-single joystick with proportional and simultaneous controls (Flow Sharing)
Outriggers	-	-	-	-	Two with proportional control and independent from the cab (OPT.)

FILLING

Vehicle model	SAMSON 50.8 VS EVO2 - GD	SAMSON 65.8 VS EVO2 - GD	SAMSON 60.9 VS EVO2 - GD	SAMSON 75.10 - GD	SAMSON 75.10 S - GD
Hydraulic system (total)	200 l (52.83 gal)	200 l (52.83 gal)	200 l (52.83 gal)	210 l (55.48 gal)	210 l (55.48 gal)
Diesel tank	125 l (33.02 gal)	125 l (33.02 gal)	125 l (33.02 gal)	125 l (33.02 gal)	125 l (33.02 gal)
AdBlue tank	27 l (7.13 gal)	27 l (7.13 gal)	27 l (7.13 gal)	27 l (7.13 gal)	27 l (7.13 gal)

TOWING CAPACITY

Vehicle model	SAMSON 50.8 VS EVO2 - GD	SAMSON 65.8 VS EVO2 - GD	SAMSON 60.9 VS EVO2 - GD	SAMSON 75.10 - GD	SAMSON 75.10 S - GD
Unbraked trailer	3500 kg (7716 lb)	3500 kg (7716 lb)	3500 kg (7716 lb)	3000 kg (6614 lb)	3000 kg (6614 lb)
Inertia braking	8000 kg (17637 lb)	8000 kg (17637 lb)	8000 kg (17637 lb)	-	-
Hydraulic/pneumatic braking	20000 kg (44092 lb)	20000 kg (44092 lb)	20000 kg (44092 lb)	20000 kg (44092 lb)	20000 kg (44092 lb)

TYRES

Vehicle model	SAMSON 50.8 VS EVO2 - GD	SAMSON 65.8 VS EVO2 - GD	SAMSON 60.9 VS EVO2 - GD	SAMSON 75.10 - GD	SAMSON 75.10 S - GD
Standard tires	18-22.5"	18-22.5"	18-22.5"	18x22,5"	18x22,5"

DIMENSIONS

Vehicle model	SAMSON 50.8 VS EVO2 - GD	SAMSON 65.8 VS EVO2 - GD	SAMSON 60.9 VS EVO2 - GD	SAMSON 75.10 - GD	SAMSON 75.10 S - GD
A	400 mm (15.7 in)	400 mm (15.7 in)	400 mm (15.7 in)	390 mm (15.4 in)	390 mm (15.4 in)
C	2800 mm (110.2 in)	2800 mm (110.2 in)	2800 mm (110.2 in)	2950 mm (116.1 in)	2950 mm (116.1 in)
D	1037 mm (40.8 in)	1037 mm (40.8 in)	1037 mm (40.8 in)	1445 mm (56.9 in)	1445 mm (56.9 in)
E1	2800 mm (110.2 in)	2800 mm (110.2 in)	2800 mm (110.2 in)	2900 mm (114.2 in)	2900 mm (114.2 in)
F	4442 mm (174.9 in)	4442 mm (174.9 in)	4442 mm (174.9 in)	4990 mm (196.5 in)	4990 mm (196.5 in)
G	5023 mm (197.8 in)	5023 mm (197.8 in)	5373 mm (211.5 in)	5910 mm (232.7 in)	5910 mm (232.7 in)
H	2545 mm (100.2 in)	2545 mm (100.2 in)	2545 mm (100.2 in)	2640 mm (103.9 in)	2640 mm (103.9 in)
I	960 mm (37.8 in)	960 mm (37.8 in)	960 mm (37.8 in)	960 mm (37.8 in)	960 mm (37.8 in)
L	1930 mm (76.0 in)	1930 mm (76.0 in)	1930 mm (76.0 in)	1930 mm (76.0 in)	1930 mm (76.0 in)
K01	37°	37°	37°	25°	25°
K03	10°	10°	10°	10°	10°
K06	144°	144°	144°	145°	145°
K07	16°	16°	16°	13°	13°
K08	131°	131°	131°	113 °	113 °
M	2375 mm (93.5 in)	2375 mm (93.5 in)	2390 mm (94.1 in)	2390 mm (94.1 in)	2390 mm (94.1 in)
O1	6223 mm (245,0 in)	6223 mm (245,0 in)	6573 mm (258.8 in)	7260 mm (285.8 in)	7260 mm (285.8 in)
P	1229 mm (48.4 in)	1229 mm (48.4 in)	1229 mm (48.4 in)	1325 mm (52.2 in)	1325 mm (52.2 in)
P1	60 mm (2.4 in)	60 mm (2.4 in)	60 mm (2.4 in)	80 mm (3,1 in)	80 mm (3,1 in)
Q	3933 mm (154.8 in)	3933 mm (154.8 in)	3933 mm (154.8 in)	4035 mm (158.9 in)	4035 mm (158.9 in)
Q1	1200 mm (47,2 in)	1200 mm (47,2 in)	1200 mm (47,2 in)	1200 mm (47,2 in)	1200 mm (47,2 in)
R1	1200 mm (47,2 in)	1200 mm (47,2 in)	1200 mm (47,2 in)	1230 mm (48.4 in)	1230 mm (48.4 in)
S1	150 mm (5.9 in)	150 mm (5.9 in)	150 mm (5.9 in)	200 mm (7.9 in)	200 mm (7.9 in)
T1	4824 mm (189.9 in)	4824 mm (189.9 in)	5104 mm (200.9 in)	5330 mm (209.8 in)	5330 mm (209.8 in)
U1	3596 mm (141.6 in)	3596 mm (141.6 in)	3875 mm (152.6 in)	4000 mm (157.5 in)	4000 mm (157.5 in)
V1	8613 mm (339.1 in)	8613 mm (339.1 in)	8613 mm (339.1 in)	9665 mm (380.5 in)	9665 mm (380.5 in)

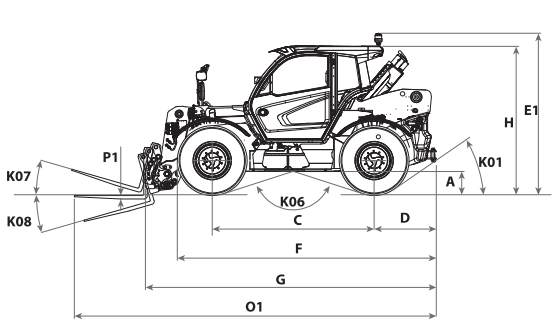

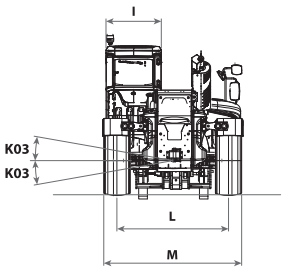

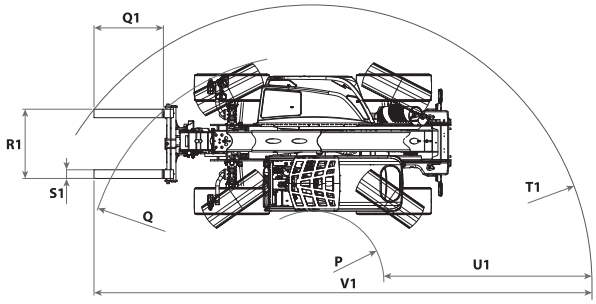

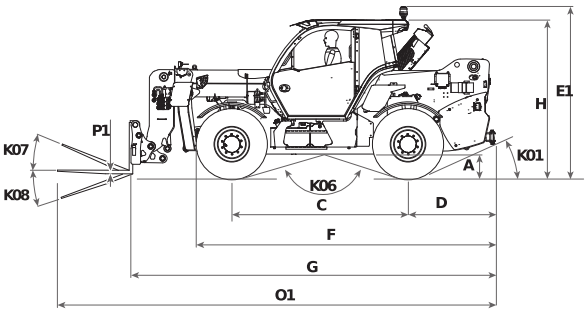

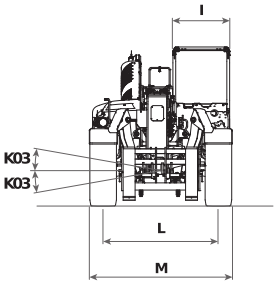

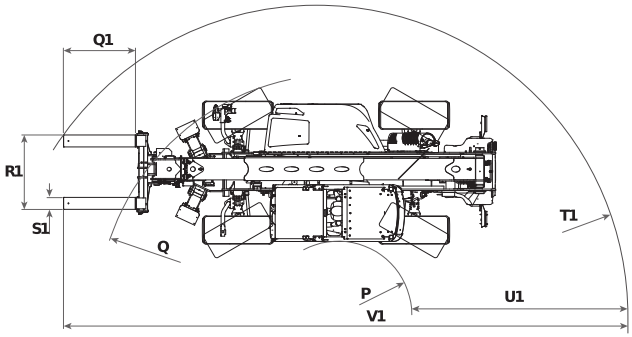

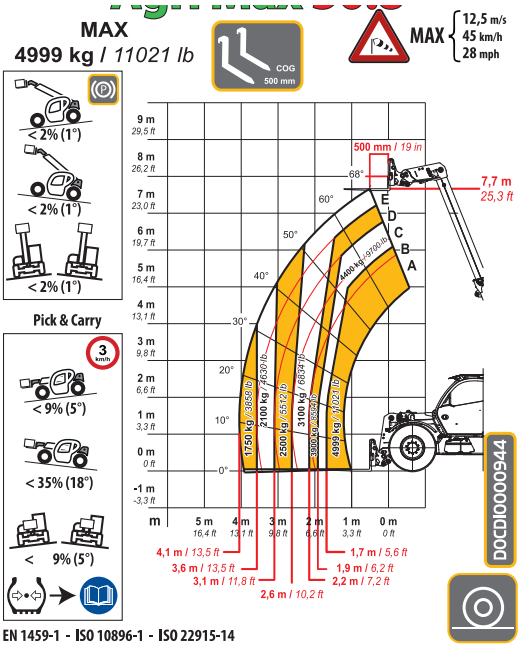

EN 1459-1 - ISO 10896-1 - ISO 22915-14

50.8

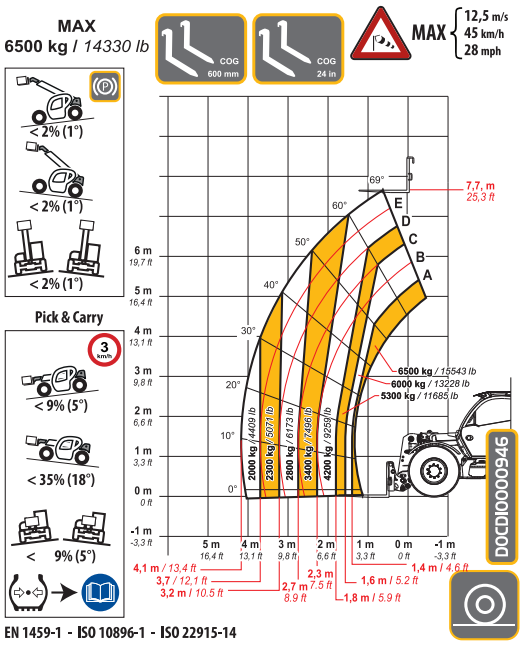

EN 1459-1 - ISO 10896-1 - ISO 22915-14

65.8

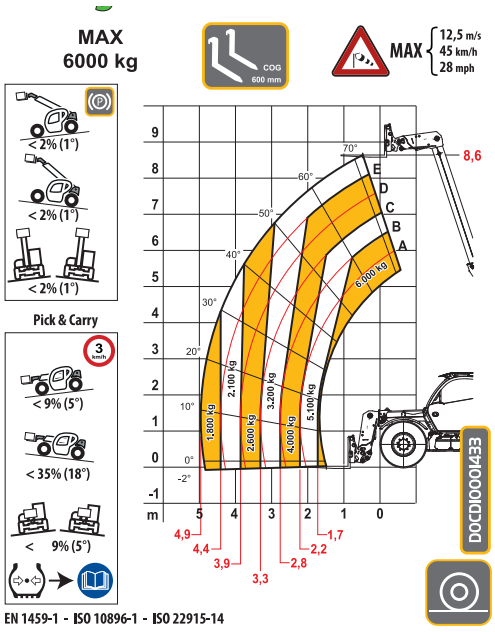

EN 1459-1 - ISO 10896-1 - ISO 22915-14

60.9

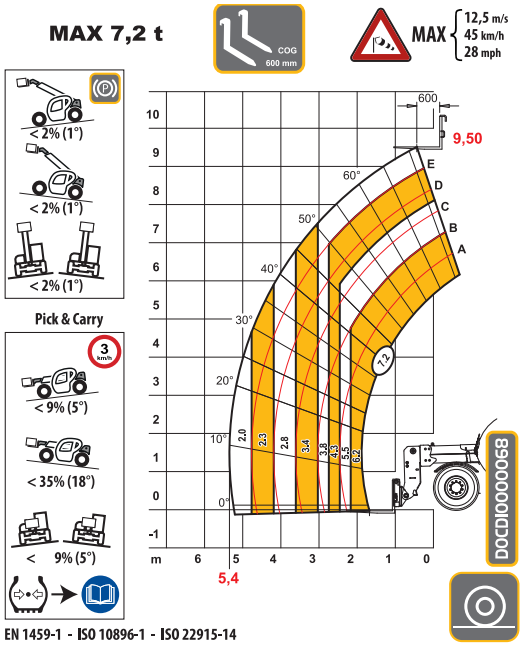

EN 1459-1 - ISO 10896-1 - ISO 22915-14

75.10

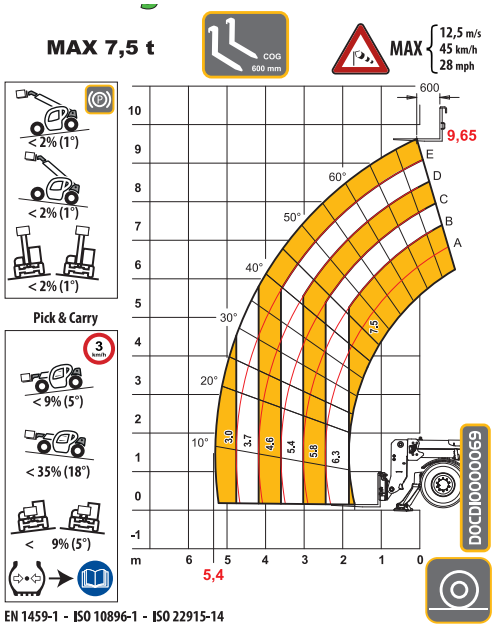

EN 1459-1 - ISO 10896-1 - ISO 22915-14

75.10 S

DIECI s.r.l. Unipersonale - Via E. Majorana, 2-4 - 42027 Montecchio Emilia (RE) ITALY
Tel. +39 0522 869611 - Fax +39 0522 869791 - E-mail: info@dieci.com - **www.dieci.com**